ELKAY®
SPECIFICATIONS

Elkay Lustertone Classic Stainless Steel 37-1/4" x 17" x 5" Double Bowl Drop-in Classroom ADA Sink Kit
Model(s) DRKAD371750LC

PRODUCT SPECIFICATIONS

Elkay Lustertone™ Classic Stainless Steel 37-1/4" x 17" x 5", Double Bowl Drop-in Classroom ADA Sink Kit. Sink is manufactured from 18 gauge 304 Stainless Steel with a Lustrous Satin finish, Center drain placement, and Bottom only pads.

Installation Type:	Drop-in
Material:	304 Stainless Steel
Finish:	Lustrous Satin
Gauge:	18
Sound Deadening:	Bottom only pads
Number of Bowls:	2
Sink Dimensions:	37-1/4" x 17" x 5"
Bowl 1 Dimensions:	9-1/4" x 12" x 3-1/2"
Bowl 2 Dimensions:	16" x 11-1/2" x 4-7/8"
Drain Size:	2" (51mm), 3-1/2" (89mm)
Drain Location:	Center
Minimum Cabinet Size:	42"
Mounting Hardware:	Part # 64090014 included for countertops up to 3/4" (19mm) thick
Cutout Template #:	1000000735

Template is available for download at elkay.com

Cutout Dimensions for Top Mount Installation:
36-5/8" x 16-3/8" (930mm x 416mm) with 1-1/2" (38mm) corner radius

Installation Profile:

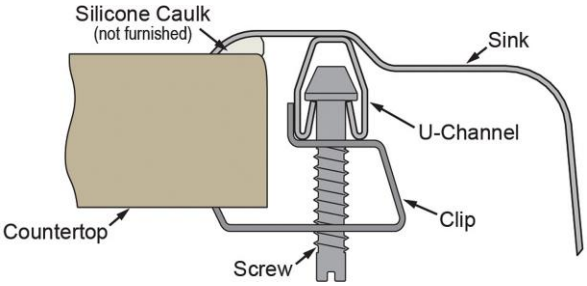

OPTIONAL ACCESSORIES

Hardware:	LK364, LK463
Sinkmate:	LKSMHSL

Included with Product: **One LKD2439C faucet, one LK1141A bubbler, one LK35 strainer, one LK8 drain fitting**

AMERICAN PRIDE. A LIFETIME TRADITION.
Like your family, the Elkay family has values and traditions that endure. For almost a century, Elkay has been a family-owned and operated company, providing thousands of jobs that support our families and communities.

Product Compliance: ADA & ICC A117.1
ASME A112.19.3/CSA B45.4
BUY AMERICAN ACT
Faucet: ASME A112.18.1/CSA B125.1
NSF 61
NSF 372 (lead free)
Accessory: ASME A112.18.2/CSA B125.2

Complies with ADA & ICC A117.1 accessibility requirements when installed according to the requirements outlined in these standards.

Clean and Care Manual (PDF)
Installation Instructions (PDF) - 74180147
Installation Instructions (PDF) - A55068_Bubbler
Installation Instructions (PDF) - P99175_Faucet
Limited Lifetime Warranty (PDF)

Similar models are available with: Quick-Clip Mounting System, additional ADA depths

1-1/2" (38mm) Diameter Faucet Holes on 4" (102mm) Centers
1-1/8" (29mm) Diameter Slotted Hole

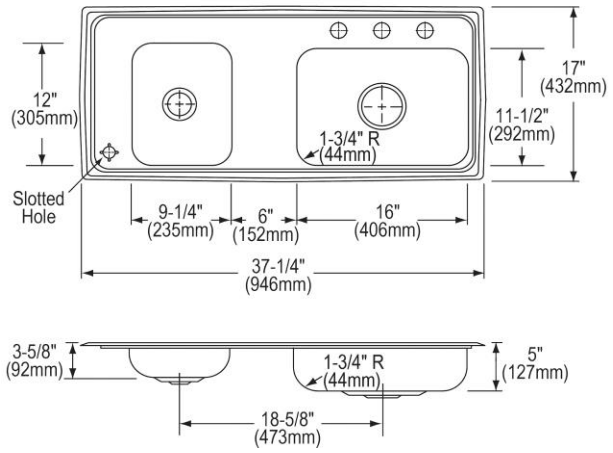

PART:_____QTY: _____
PROJECT:_____
CONTACT:_____
DATE:_____
NOTES:_____
APPROVAL:_____

In keeping with our policy of continuing product improvement, Elkay reserves the right to change product specifications without notice. Please visit elkay.com for the most current version of Elkay product specification sheets. This specification describes an Elkay product with design, quality, and functional benefits to the user. When making a comparison of other producers' offerings, be certain these features are not overlooked.